RYOBI®

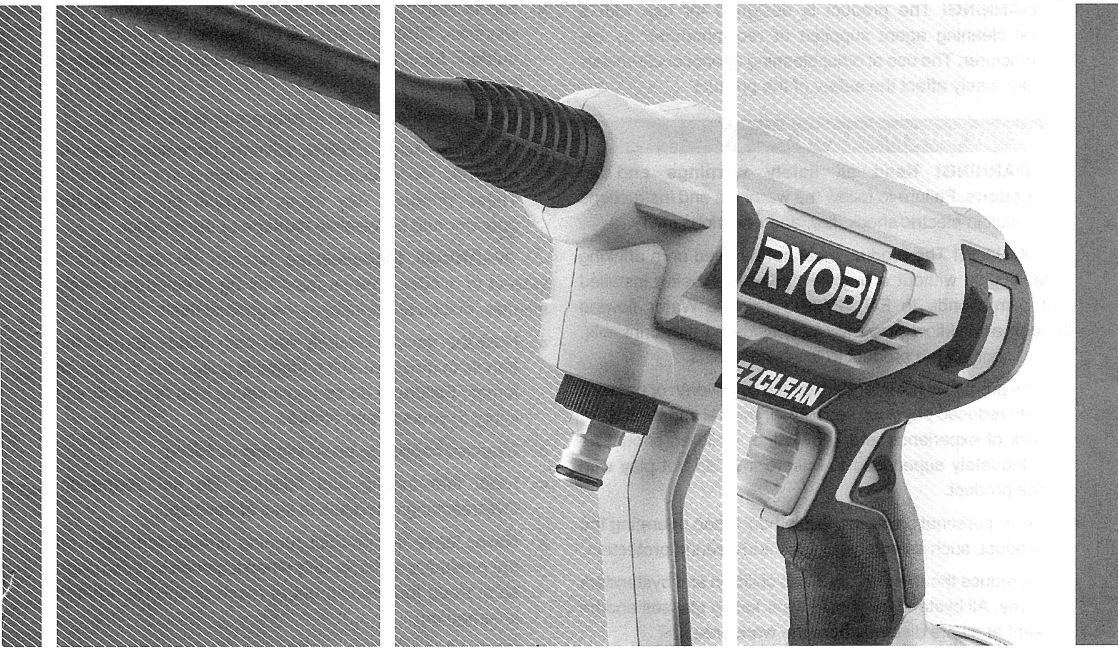


# OWA1800

**IMPORTANT!**

It is essential that you read the instructions in this manual before assembling, operating, and maintaining the product.

Subject to technical modification.

Safety, performance, and dependability have been given top priority in the design of your cordless power washer.

## INTENDED USE

The cordless power washer is intended for outdoor use only.

The product is designed for home or domestic use. It is intended to clean patio furniture, windows, automobiles, boats by removal of stubborn dirt using clean water with or without cleaning detergent.

The product should be used in well-illuminated conditions.

Do not use the product for any other purpose.

⚠ **WARNING!** The product is designed for use with a neutral cleaning agent supplied or recommended by the manufacturer. The use of other cleaning agents or chemicals may adversely affect the safety of the product.

## GENERAL SAFETY WARNINGS

⚠ **WARNING! Read all safety warnings and all instructions.** Failure to follow the warnings and instructions may result in electric shock, fire, and/or serious injury.

⚠ **CAUTION!** The product must not be used on a drinking water supply without a backflow preventer being installed that corresponds to EN 12729 Type BA. Water flowing through a backflow preventer is considered non-drinkable. Do not connect the product to the water mains.

- The product is not intended for use by children or persons with reduced physical, sensory, or mental capabilities, or lack of experience and knowledge. Children should be adequately supervised to ensure they do not play with the product.
- Wear personal protective equipment when operating the product, such as safety goggles and hearing protection.
- To reduce the risk of injury, keep children and bystanders away. All bystanders should wear safety glasses and be kept at a safe distance from the work area.
- Inspect the safety devices to check if they are in good working condition. Make sure that all safety devices are operating properly before each use.
- Do not use the product if the important parts are damaged, such as safety devices or spray wand.

⚠ **WARNING!** During the use of power washers, aerosols may be formed. Inhalation of aerosols can be hazardous to health.

⚠ **WARNING!** Do not turn the nozzle while pulling the trigger. If the water is flowing while the nozzle is turned, the relief channel releases the water. This is not a leak, but allows the water to escape without damaging the tool.

- High-pressure jet is dangerous if misused. Do not direct the jet to people, live electronics, or the product itself.
- To avoid the risk of explosion, do not spray flammable liquids.
- Do not direct the jet against yourself or others to clean clothes or footwear.
- Hoses, fittings, and couplings are important for the safety of the product. Use only hoses, fittings, and couplings that are recommended by the manufacturer.
- Some regions have regulations that restrict the use of the product in some operations. Check with your local authority for advice.
- Before each use, check for damage. Damaged hoses must be replaced immediately. Ensure that all connections, such as spray wand and nozzle, are secure. Unwind the hose properly so they may not get twisted or kinked.
- Before starting any cleaning operation, close doors and windows. Clear the area to be cleaned of debris, toys, outdoor furniture, or other objects that could create a hazard.
- Do not use the product in temperatures below 0°C.
- Do not use acids, alkaline, solvents, flammable material, bleaches, or industrial grade solutions in the product. These products can cause physical injuries to the operator and irreversible damage to the product.

⚠ **WARNING!** High-pressure jet can be dangerous if subject to misuse. The jet must not be directed to people, animals, electrical devices, or the product itself.

- Hold the handle securely with both hands. Expect the handle to move when the trigger is pulled due to reaction forces. Failure to do so could cause loss of control and injury to yourself and others.
- Exercise caution to avoid slipping or falling.
- Keep firm footing and balance. Do not overreach. Overreaching can result in loss of balance.
- Never leave the product running unattended. Turn off the product, and leave only when it comes to a complete stop. Keep the product out of reach of children when it is turned on.
- Be familiar with the controls. Know how to stop the product and bleed the pressure quickly.
- Stay alert, and exercise control. Watch what you are doing, and use common sense.
- Do not use the product while tired, ill, or under the influence of drugs, alcohol, or medication. A moment of inattention while operating the product may result in serious personal injury.
- Do not use the product if the switch does not turn it on and off. Any product that cannot be controlled with a switch is dangerous and must be repaired.
- Keep a minimum distance of 30 cm when cleaning

vehicles. The high-pressure jet may damage or burst vehicle tires or tire valves.

- The product is not to be used if it has been dropped, if there are visible signs of damage, or if it is leaking.
- Injuries may be caused, or aggravated, by prolonged use of the product. When using the product for prolonged periods, ensure to take regular breaks.

### SAFETY DEVICES

- Handle grip
  - The handle grip has a gripping surfice that provides added control of the spray wand and helps reduce fatigue.
- Lock-out button
  - The lock-out button locks the switch trigger and prevents unintentional opening of the high-pressure jet.

## BATTERY PACK SAFETY WARNINGS

- Recharge the battery pack only with the charger specified by the manufacturer. A charger that is suitable for one type of battery pack may create a risk of fire when used with another battery pack.
- When battery pack is not in use, keep it away from other metal objects, such as paper clips, coins, keys, nails, screws, or other small metal objects that can make a connection from one terminal to another. Shorting the battery pack terminals together may cause burns or a fire.
- Keep the battery pack and the charger away from wet and damp conditions.
- Use the product only with battery packs specified in this manual. Use of any other battery packs may create a risk of injury and fire.
- Under abusive conditions, liquid may be ejected from the battery pack; avoid contact. If contact accidentally occurs, flush with water. If liquid contacts eyes, seek medical help. Liquid ejected from the battery pack may cause irritation or burns.
- The battery pack has overheat protection. Excessive temperatures will cause the battery to stop powering the product. If the battery pack is too warm, allow it to cool down before resuming operation. If the product still does not work, recharge the battery pack.

  **NOTE:** The battery pack LED indicator will not work if the battery pack protection feature has caused the battery pack to stop powering the product. Release the on-off button or remove the battery pack from the product and the battery pack LED indicator will resume normal function.

## ADDITIONAL BATTERY SAFETY WARNINGS

⚠ **WARNING!** Do not splash water to the product. It may damage the battery pack.

To reduce the risk of fire, personal injury, and product damage due to a short circuit, never immerse your tool, battery pack or charger in fluid or allow fluid to flow inside them. Corrosive or conductive fluids, such as seawater, certain industrial chemicals, and bleach, or bleach-containing products, etc., can cause a short circuit.

## TRANSPORTATION AND STORAGE

- Stop the product, remove the battery pack, and allow the product to cool down. Disconnect the product from the water supply before storing or transporting.
- Remove water from all hoses and the pump, and empty the detergent tank before storing the product.
- Neatly coil the siphon hose, and store it with the power washer.
- Clean all foreign materials from the product. Store it in a cool, frost-free, dry, and well-ventilated place that is inaccessible to children. Do not store the product near the furnace or other sources of heat that could dry out the pump seals. Keep the product away from corrosive agents, such as garden chemicals and de-icing salts. Do not store the product outdoors.
- For transportation in a vehicle, secure the product against movement or falling to prevent injury to persons or damage to the product.

⚠ **WARNING!** Store the product indoors only. Storing in an area with temperature below 0° will damage the product.

### TRANSPORTING LITHIUM BATTERIES

Transport the battery pack in accordance with local and national provisions and regulations.

Follow all special requirements on packaging and labelling when transporting batteries by a third party. Ensure that no batteries can come in contact with other batteries or conductive materials while in transport by protecting exposed connectors with insulating, non-conductive caps or tape. Do not transport batteries that are cracked or leaking. Check with the forwarding company for further advice.

## MAINTENANCE

Use only original manufacturer's replacement parts, accessories, and attachments. Failure to do so can cause possible injury, can contribute to poor performance, and may void your warranty.

Servicing requires extreme care and knowledge and should be performed only by a qualified service technician. Have the product serviced by an authorised service centre only. When servicing, use only original replacement parts.

- Stop the product, remove the battery pack, and allow the product to cool down. Disconnect the product from the water supply:
  - before cleaning the product
  - before maintaining the product

- before replacing spare parts

- You may make adjustments or repairs described in this manual. For other repairs, contact an authorised service centre.
- Regularly inspect and maintain the product for safe operation. Ensure that the battery compartment is properly assembled, tightly closed, and frequently check for damages. Any part that is damaged should be properly repaired or replaced by an authorised service centre.
- If the product is to be stored unused for a long period, the batteries should be removed.

## SYMBOLS ON THE PRODUCT

Read and understand all instructions before operating the product. Follow all warnings and safety instructions.

Wear eye and hearing protection.

To reduce the risk of injury from high-pressure injection, do not direct spray at persons or animals.

Kickback. To reduce the risk of injury from kickback, hold the trigger handle securely with both hands when the product is on.

The product is not suitable for connection to the drinking water supply without backflow preventer.

Never point the spray wand to human, animals, the body of the product, power supply, or any electrical appliances.

Burst hazard

Regulatory Compliance Mark (RCM). The product meets applicable regulatory requirements.

Waste electrical products should not be disposed of with household waste. Please recycle where facilities exist. Check with your local authority or retailer for recycling advice.

## SYMBOLS IN THIS MANUAL

Parts or accessories sold separately

Note

Warning

## OWA1800

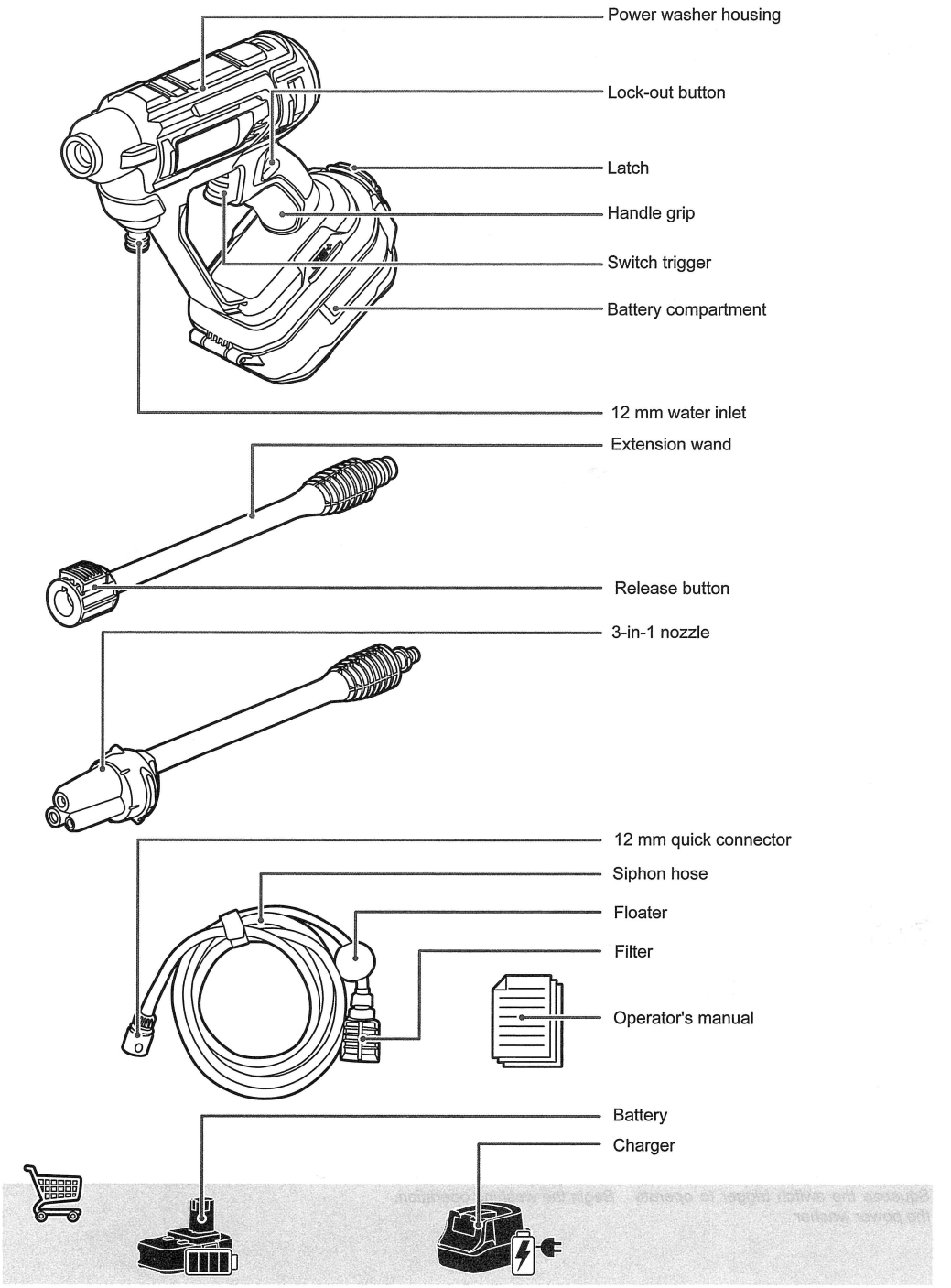
Power washer housing
Lock-out button
Latch
Handle grip
Switch trigger
Battery compartment
12 mm water inlet
Extension wand
Release button
3-in-1 nozzle
12 mm quick connector
Siphon hose
Floater
Filter
Operator's manual
Battery
Charger

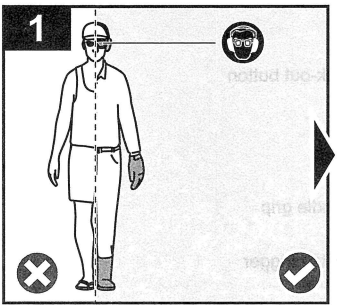


*Wear full eye and ear protection, substantial footwear, and long trousers at all times while operating the product. Do not operate the product when barefoot or wearing open sandals.*

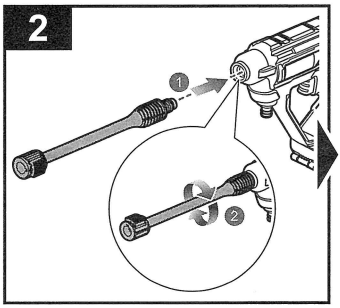


*Connect the threaded end of the extension wand to the power washer assembly. Turn the wand clockwise to secure it in place.*

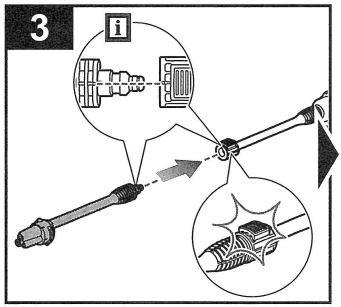


*Insert the end of the 3-in-1 nozzle into the connector end of the extension wand and push until it clicks into place.*

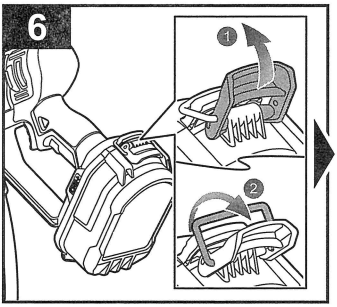


*Flip the latch up and unlock the latch clip to access the battery compartment.*

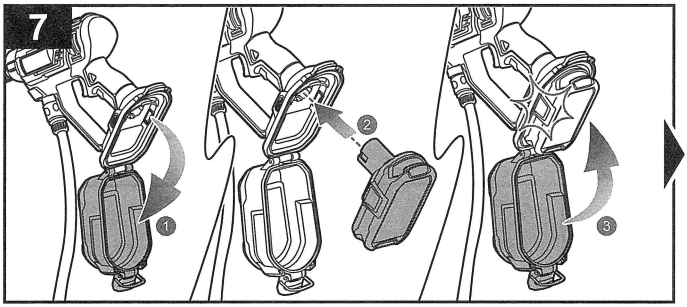


*Open the battery compartment and install the battery pack into the housing until it clicks into place. Close the battery compartment to secure the battery pack.*

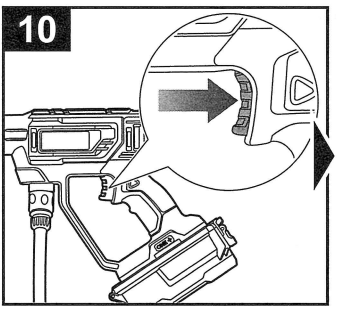


*Squeeze the switch trigger to operate the power washer.*

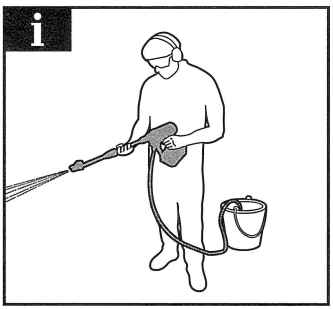


*Begin the washing operation.*

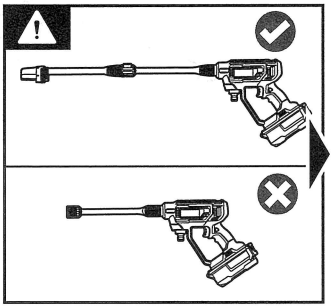

*Never use the power washer without connecting the 3-in-1 nozzle.*

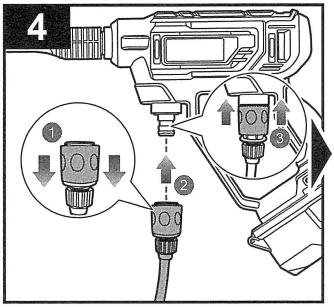


*Pull the quick connector collar down and insert into the water inlet. Push the connector collar up to secure the siphon hose in place.*

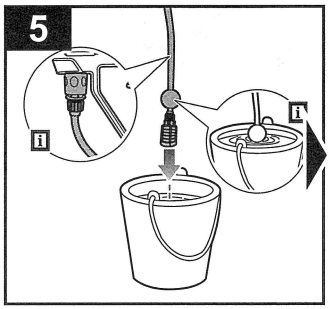


6

*Place the other end of the hose with floater and filter into your water source.*
**NOTE:** The maximum suction height for the siphon hose is 1.8 m.

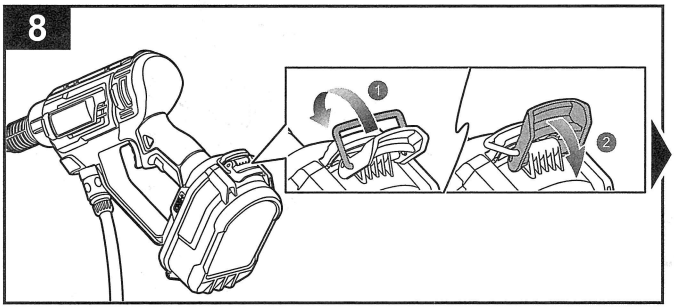


*Flip the latch clip upward and press down the latch to secure the battery compartment cover in place.*

⚠ **WARNING!** IPX5 rating is only for the battery compartment and is achieved when the battery compartment is closed.

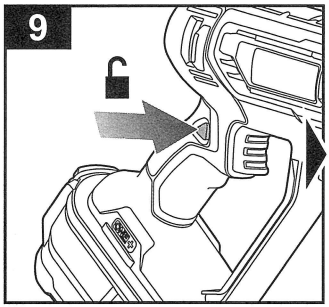


10

*Press the lock-out button.*

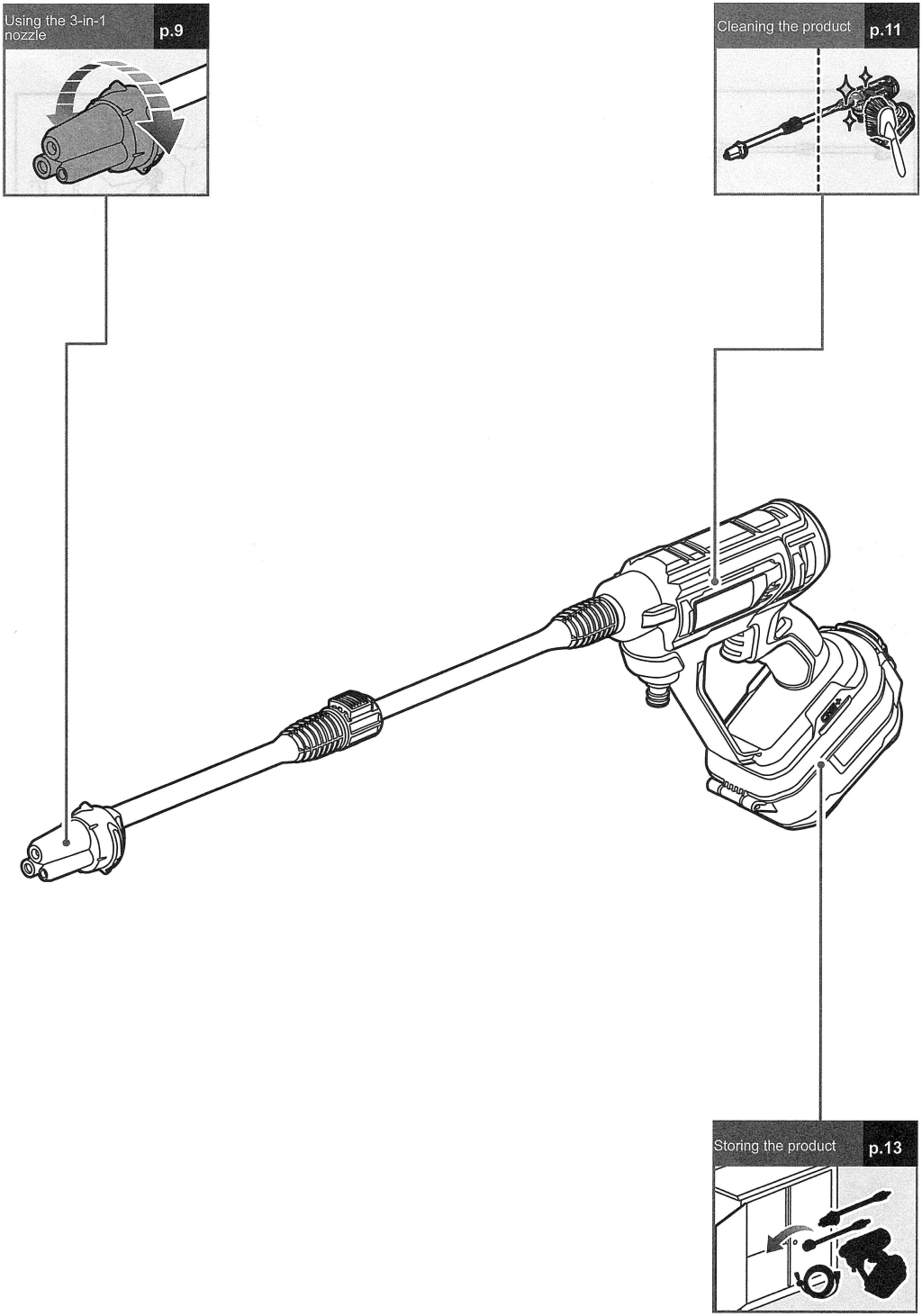
Using the 3-in-1 nozzle
p.9
Cleaning the product
p.11
Storing the product
p.13

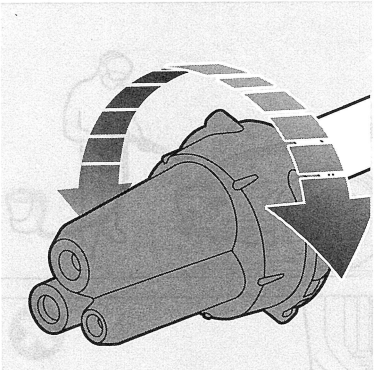

## USING THE 3-IN-1 NOZZLE

1. Press the lock-out button to lock the product.
2. Turn the 3-in-1 nozzle clockwise or counterclockwise to select the spray pattern.
3. Press the lock-out button to unlock the product, and squeeze the switch trigger to start operating the product.

**NOTE:** Use the 15° setting for cleaning or washing wide areas or surfaces.

**NOTE:** Use the rinse setting for watering applications.

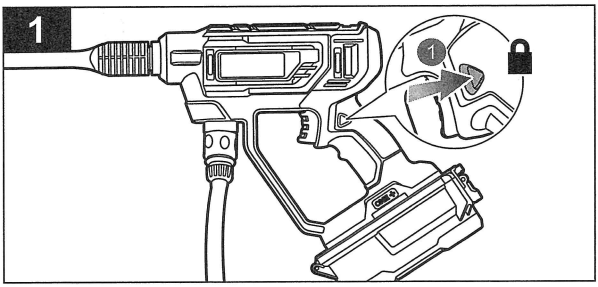


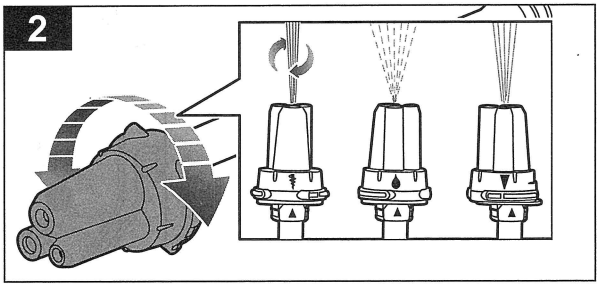


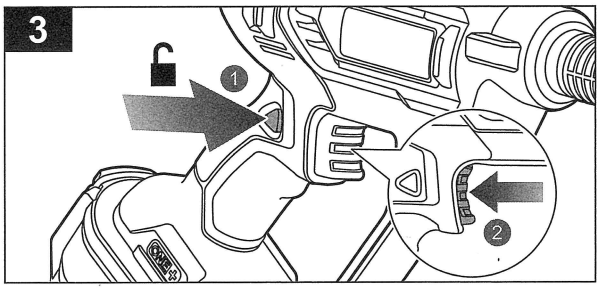


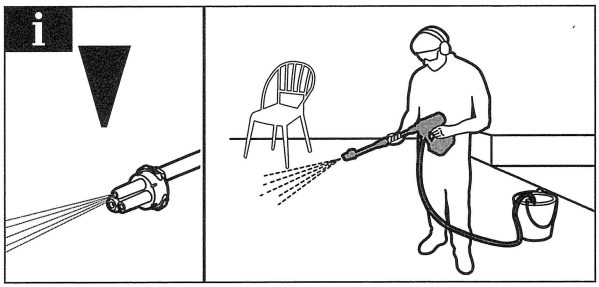


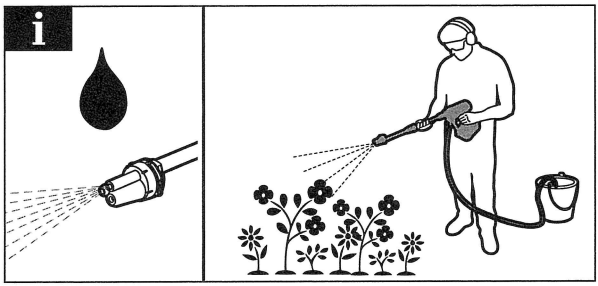

**NOTE:** Use the turbo setting for cleaning or washing stubborn dirt or surfaces.

**WARNING!** Do not squeeze the switch trigger while changing nozzle spray patterns.

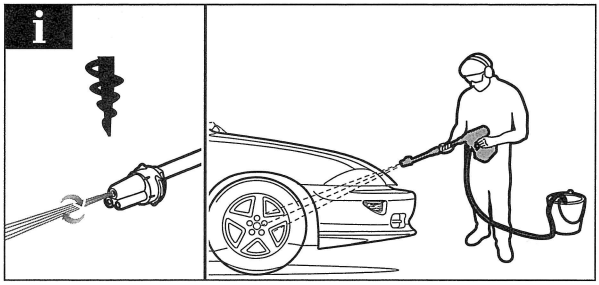

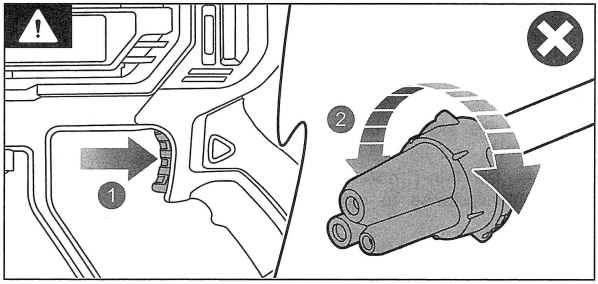

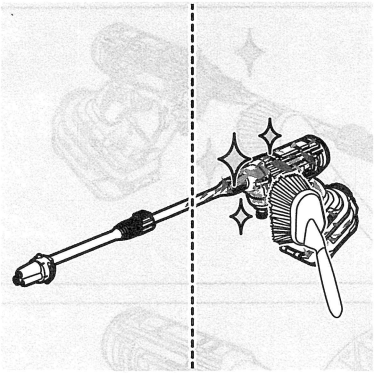

## CLEANING THE PRODUCT

1. Flip up the latch and unlock the latch clip to access the battery compartment.
2. Open the battery compartment and press the latches on the sides of the battery pack to remove the battery pack. Close the battery compartment.
3. Flip the latch clip upward and press the latch down.
4. Pull the quick connector collar down and disconnect the siphon hose from the water inlet.
5. Turn the filter clockwise and pull down to disconnect it from the floater. Clean the filter with water. Push the filter into the floater and turn counterclockwise to secure it back in place.

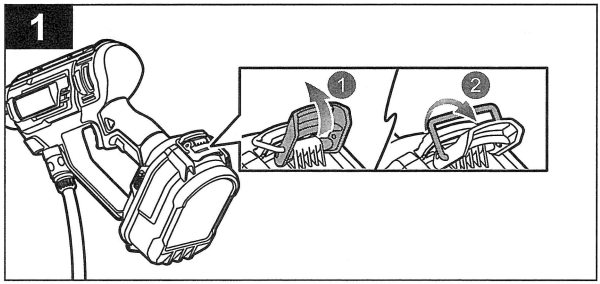


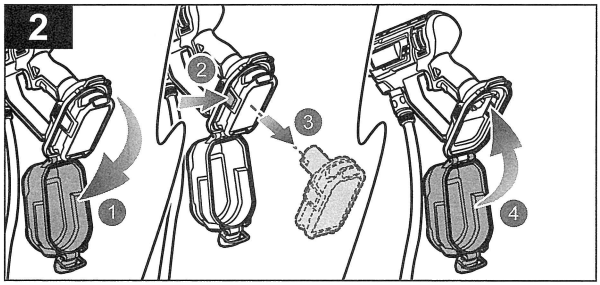


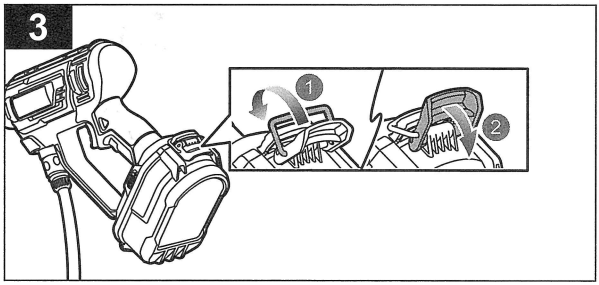


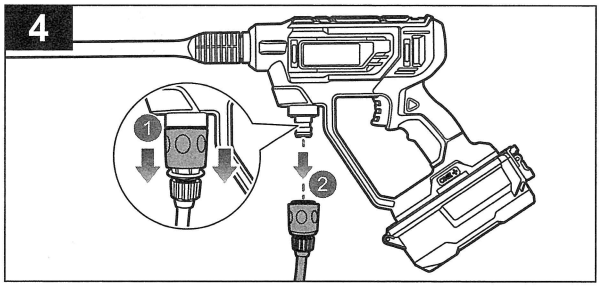


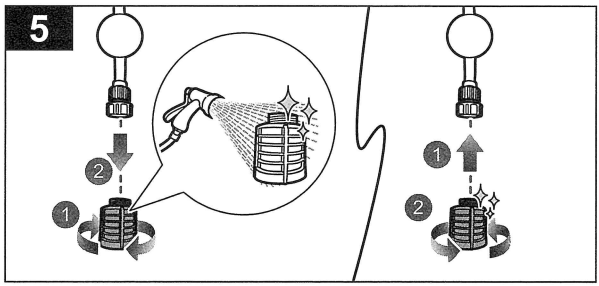

6. Clean the product with a soft, dry cloth and a brush.
7. Turn the water inlet adaptor clockwise to loosen and access the o-ring.
8. Use water to clean the o-ring. Install the o-ring back into the product and turn the water inlet adapter counterclockwise to secure it in place.

**WARNING!** Do not use water to clean the product.

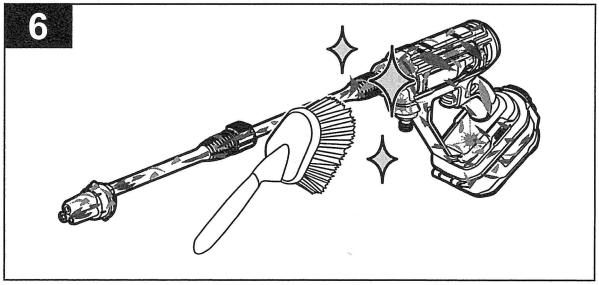


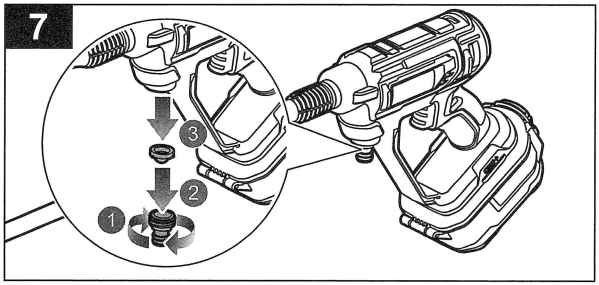


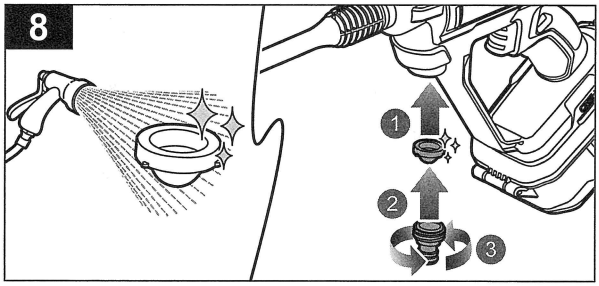


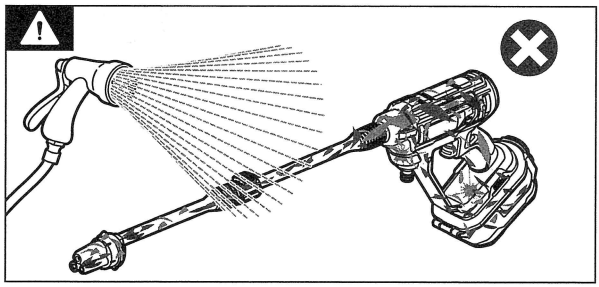

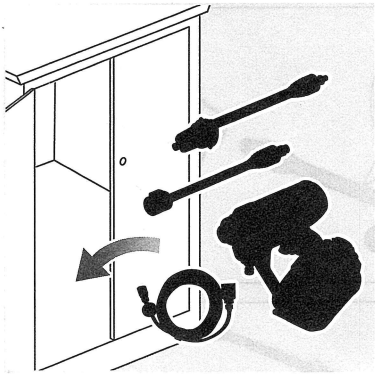

## STORING THE PRODUCT

1. Flip up the latch and unlock the latch clip to access the battery compartment.
2. Open the battery compartment and press the latches on the sides of the battery pack to remove the battery pack. Close the battery compartment.
3. Flip the latch clip upward and press the latch down.
4. Pull the quick connector collar down, and disconnect the siphon hose from the water inlet.
5. Press the release button on the extension wand to remove the 3-in-1 nozzle.

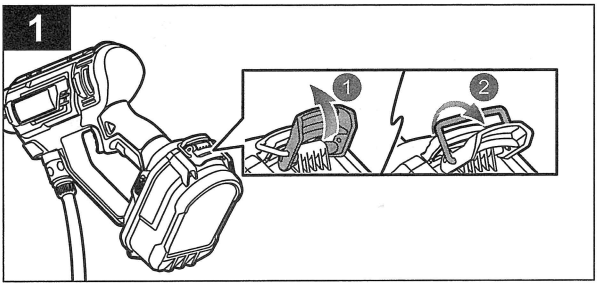


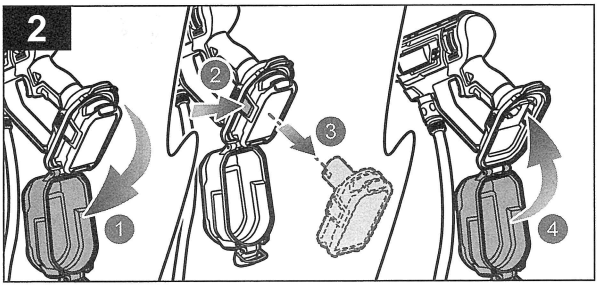


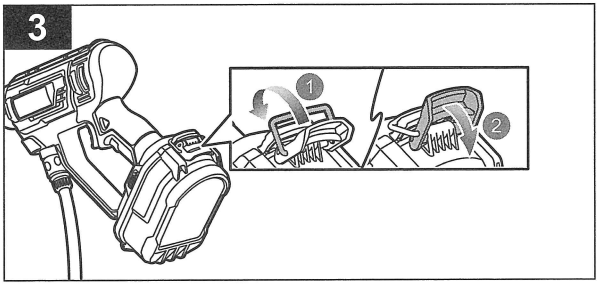


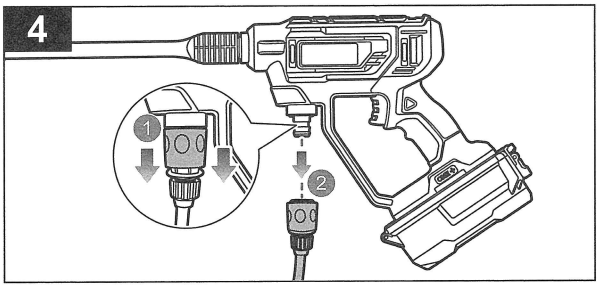


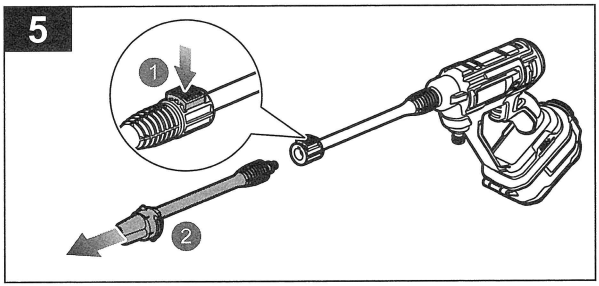

6. Turn the extension wand counterclockwise and pull it out from the power washer housing.
7. Store the product in a cool, dry, and well-ventilated place that is inaccessible to children and well away from sources of ignition.

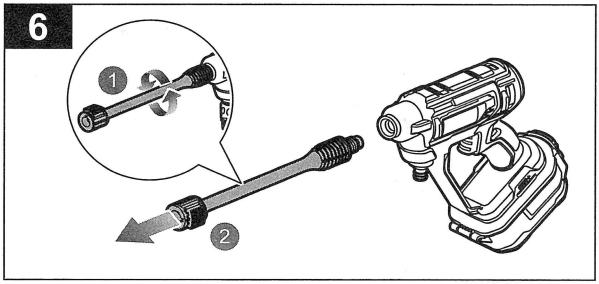


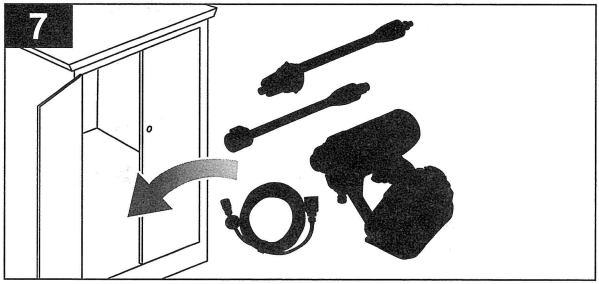


20210105v1d1

## PRODUCT SPECIFICATIONS

| Cordless power washer | |
|---|---|
| Model | OWA1800 |
| Rated voltage | 18V d.c. |
| Weight | 2 kg |
| Maximum pressure | 24.8 bar (360 psi) |
| Rated pressure | 22 bar (320 psi) |
| Dilution ratio | 1:20 |
| Rated flow | 3 L/hr |
| Maximum flow | 4.5 L/hr |
| Maximum inlet water pressure | 7 bar (100 psi) |
| Maximum suction height | 1.8 m |
| Maximum garden hose length | 6 m |
| Minimum garden hose inner diameter | 8 mm |

## BATTERY AND CHARGER

| Model | OWA1800 |
|---|---|
| Battery pack | not included |
| Charger | not included |
| Compatible battery packs | RB18L.. |
| Compatible chargers | BCS618G, BCL14181.., RC18.. |

## ACCESSORIES

| 20L water bag | RAC717 |
|---|---|
| Stone detergent | RAC731 |
| Foam detergent | RAC732 |
| Universal detergent | RAC733 |
| Wood detergent | RAC734 |
| Syphoning kit | RAC747 |
| Detergent bottle | RAC748 |
| Wheel brush | RAC749 |
| Fixed brush | RAC750 |
| 2L bottle adapter | RAC751 |
| Misting kit | RAC754 |

Imported by:
**Techtronic Industries Australia Pty Ltd**
31 Gilby Road, Mount Waverley, VIC 3149
Melbourne, Australia

**Techtronic Industries N.Z. Limited**
Unit C, 70 Business Parade South,
Highbrook, Auckland 2013, New Zealand

*RYOBI is a trade mark of Ryobi Limited, and is used under license.*
*© 2021 Techtronic Cordless GP*

960398022-01